INSTALLATION INSTRUCTIONS

FOR SLOT CONCRETE DRAINAGE CHANNELS

CONTENTS:

CE

1. LIST OF SLOT CHANNEL PROFILES

SLOT CHANNEL - PROFIL T

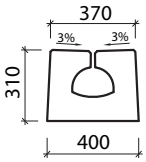

TYP T-0

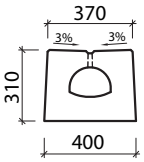

TYP T-1

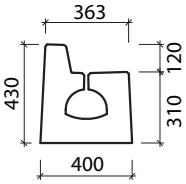

TYP T-3

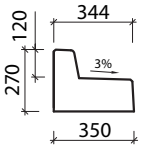

TUNNEL CURBSTONE
K TYPU T-3

SLOT CHANNEL - PROFIL I

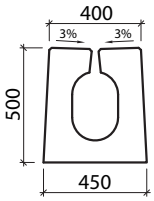

TYP I-0

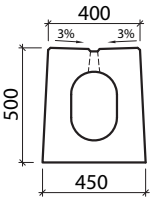

TYP I-1

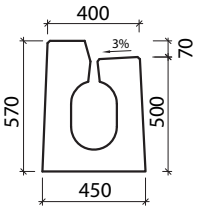

TYP I-2

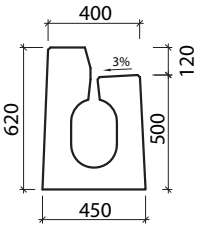

TYP I-3

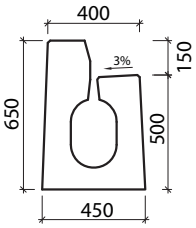

TYP I-4

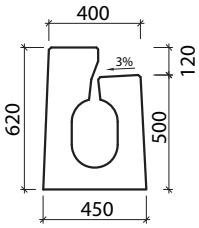

TYP I-5

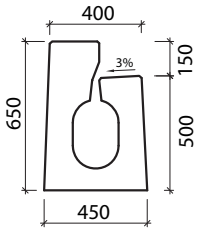

TYP I-6

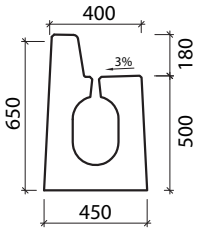

TYP I-7

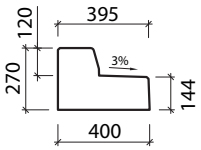

TUNNEL CURBSTONE
K TYPU I-3

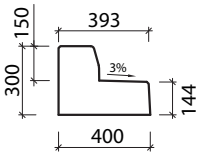

TUNNEL CURBSTONE
K TYPU I-4

SLOT CHANNEL - PROFIL II

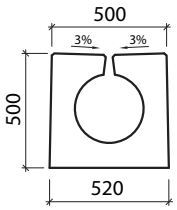

TYP II-0

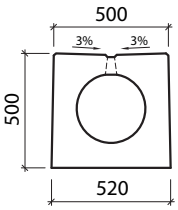

TYP II-1

SLOT CHANNEL - PROFIL III

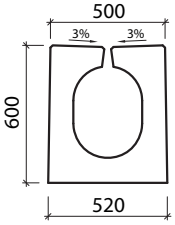

TYP III-0

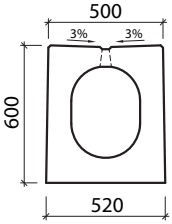

TYP III-1

SLOT CHANNEL - PROFIL IV

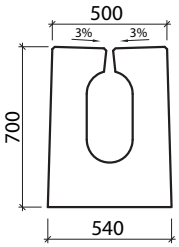

TYP IV-0

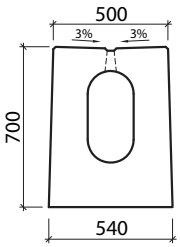

TYP IV-1

SLOT CHANNEL - PROFIL V

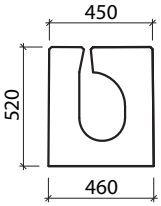

TYP V-0

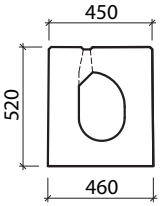

TYP V-1

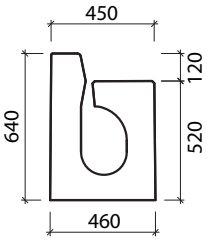

TYP V-3

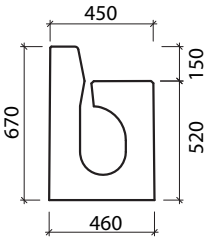

TYP V-4

SLOT CHANNEL - PROFIL VI

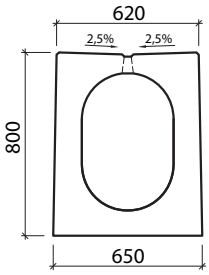

TYP VI-1

2. INTRODUCTION

We deliver concrete slot channel systems used in all types of paved surfaces (for transportation uses, handling surfaces, airport surfaces, etc.). Given the repeated errors made within their installation and irreparable failures that result, We hereby issues this set of recommended instructions for installing and embedding slot channels with the goal of ensuring their correct and trouble-free operation. These instructions are binding for the installation and embedding of these slot channels and provide a reference for drain manufacturers in determining the defects that occur in such systems. We do not preclude that any other installation instructions compliant with corresponding manufacturer techniques could be used to install and embed slot channels, under the assumption that the newly created instructions do not negate or refute the principles, procedures and recommendations provided in this document.

3. TECHNICAL PREPARATIONS BEFORE SLOT CHANNEL INSTALLATION

Before laying the slot channel the contractor should conduct a thorough inspection of all technical parameters in project documentation, ensure the completeness of delivery, site preparedness and the suitability of the installation equipment.

3.1 Check of technical documentation

A check of technical documentation includes:

- Checking compliance between project documentation and the ordered slot channels, in particular type, markings and qualitative parameters. Documentation should clearly define atypical components with clear data indicating their differences.
- Checking the laying plan, which should be included in the project documentation with a clear indication of the positions of the individual drain components.
- Checking documentation in terms of qualitative requirements for structural layers adjacent to the slot channel. This primarily concerns the level of compaction of the footing of the underlying concrete for the slot channel, usually expressed as Edef2. Last but not least the precise characteristics of additional materials used pursuant to valid CSN (Czech technical standards) and TP (technical conditions) must be defined.
- Checking the method and completion of thermal expansion joints in precast concrete components, which should always meet the requirements for elasticity, compressibility and volume stability (e.g. hardboard dipped in asphalt, EPS70 etc.) and which must also be protected against physical damage when compacting adjacent non-compacted layers (e.g. 0.7mm thick sheet metal; extending approximately 20mm over the compacted layer).

3.2 Getting started at the site

Before commencing the actual installation of the slot channel a check of the project must be completed to ensure the following technical parameters have been met:

- The footing of underlying concrete used as a base for laying the slot channel must be completed following the project in terms of its height and position. The following must be checked in particular: accuracy of the height of the footing to correspond to the expected height of the road surface (upper surface of the channel). Footings must be levelled to within ± 20 mm.
- Verification that the footing is compacted to the required level must be completed (pursuant to the valid procedure laid down in ČSN 72 1006); in addition a check must be complete to ensure the compaction value meets the requirements defined in the project.
- A detailed check must be completed for the completeness of deliveries of slot channel components. Checks include compliance between the laying plan and the list of components provided in deliveries. The check of delivery completeness includes checking deliveries of the installation adhesive, rubber sealing gaskets and plastic covers (and steel grates or sheet metal covers) for cleanout and inlet pieces including locking screws, metal sludge baskets, shaft components installed beneath inlet pieces and any shaft rectifying elements.
- A detailed check of the production dimensions of slot channel components must be completed and all production tolerances must be respected.Such dimensional tolerances (wet perimeter) are defined in the ČSN EN 1433 technical standard with other tolerances shown in the table on page 5.
- A check must be completed to ensure the integrity of slot channel and accessories, in particular channel mating sockets and coupling rings on both ends. Any defects in these areas are unacceptable. Broken components on coupling rings are a major failure that can occur during handling and transport and have a major influence on the seal of channel connections. Small breaks of up to 2 cm² and to a depth of 1 cm can be repaired pursuant to Manufacturer Directive 9/98. Failures with larger dimensions must be inspected by the manufacturer, which will decide to repair or replace the affected component.

Schematic of production dimensions to be checked

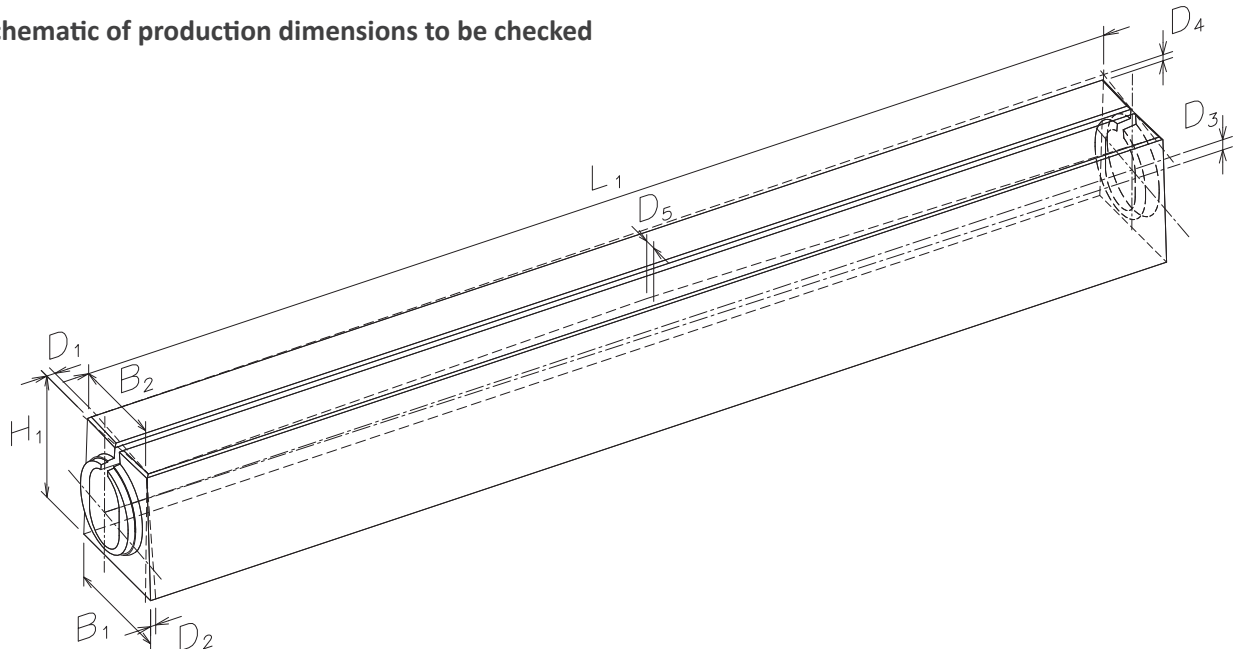

Legend:	
L1	component length
b	width of flow profile
B1	product width, lower
B2	product width, upper
h	height of flow profile
H1	product height
D1	face deviation from perpendicular to side
D2	face deviation from vertical to upper surface
D3	alignment of the centres of the connecting element of the face from the upper surface of the channel
D4	longitudinal spirality of upper surface measures on faces compared to longitudinal middle of the channel
D5	straightness of the upper edges of the component

Dimensional tolerances

Profile T:		
L1 = 3995 ± 5 mm	b =180 ± 2 mm	h =130 ± 2 mm
B1 = 400 ± 4 mm	B2 = 370 ± 4 mm	H1 = 310 ± 3 mm
Profile I:		
L1 = 3995 ± 5 mm	b =200 ± 2 mm	h=200-300 ± 2mm
B1 = 450 ± 4 mm	B2 = 400 ± 4 mm	H1 = 500 ± 3 mm
Profile II:		
L1 = 3995 ± 5 mm	b =300 ± 2 mm	h=300 ± 2mm
B1 = 520 ± 4 mm	B2 = 500 ± 4 mm	H1 = 500 ± 3 mm
Profile III:		
L1 = 3995 ± 5 mm	b =300 ± 2 mm	h= 400 ± 2mm
B1 = 520 ± 4 mm	B2 = 500 ± 4 mm	H1 = 600 ± 3 mm
Profile IV:		
L1 = 3995 ± 5 mm	b =200 ± 2 mm	h=400 ± 2 mm
B1 = 540 ± 4 mm	B2 = 500 ± 4 mm	H1 = 700 ± 3 mm
Profile V:		
L1 = 3995 ± 5 mm	b =200 ± 2 mm	h=200-300 ± 2mm
B1 = 460 ± 4 mm	B2 = 450 ± 4 mm	H1 = 670/520 ± 3 mm
Profile VI:		
L1 = 3995 ± 5 mm	b =400 ± 2 mm	h=600 ± 2mm
B1 = 650 ± 4 mm	B2 = 680 ± 4 mm	H1 = 880 ± 3 mm
Common for all profiles:		
D1, D2, D3, D4 = ± 3 mm		D5 = ± 5 mm

ATTENTION! Compositional dimensions presented in the laying plan are not the same as production dimensions (see the illustration).

Longitudinal section

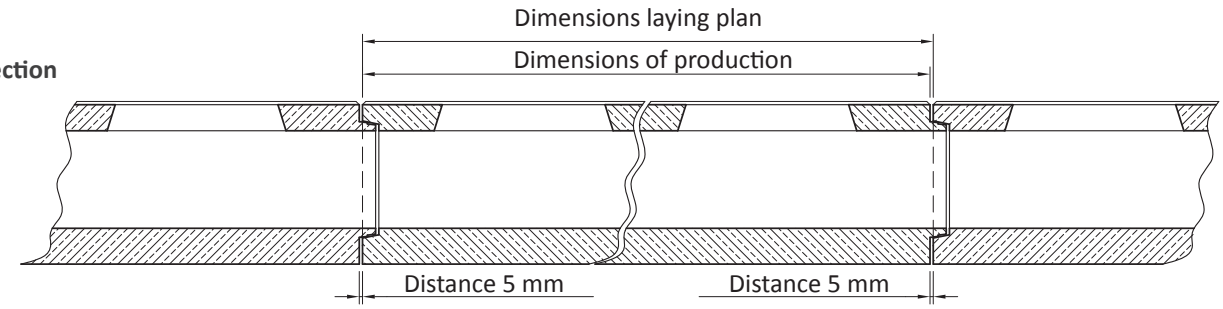

Top view

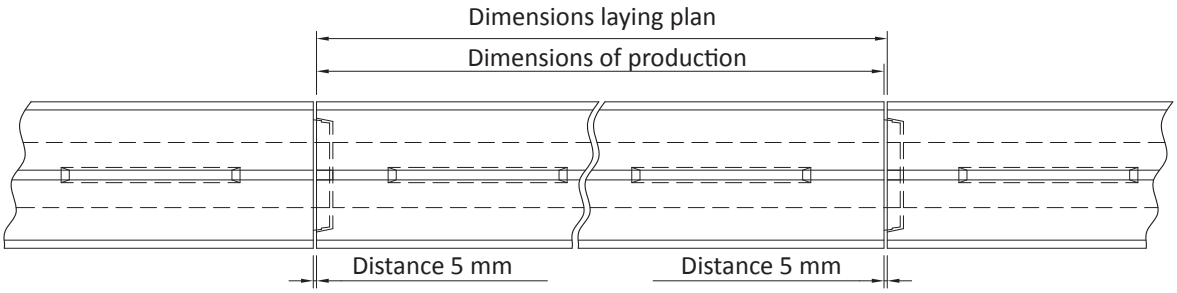

3.3 Installation equipment

A check of all installati on aids must be completed before actual installati on can commence; special attenti on must be given to rigging equipment and hoisti ng lines. These installati on instructi ons must be throughly reviewed by the Local Labour Inspectorate. The use of rigging and installati on equipment provided by the manufacturer in exchange for a refundable deposit is as follows:

- **Installation hooks** - this equipment is used to handle the slot channel. The installation hooks are secured to the eyelet on the hoisting line. There are small and large installation hooks depending on the different sizes of slot channels. Large installation hooks are used for slot channel with the integrated curb.
- **Spacers** - these simple devices are used to maintain the minimum required expansion joint of 5 mm at the joints between the individual sections of slot channel.

Installation hook placement

Large installation hooks

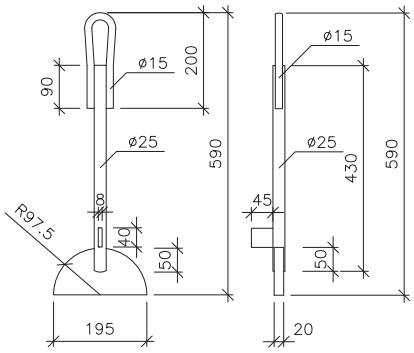

Small installation hooks

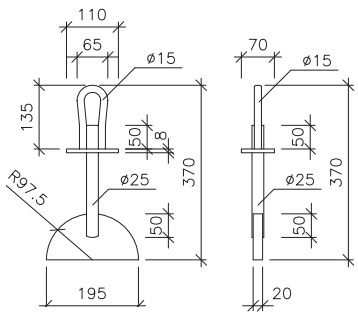

Spacers

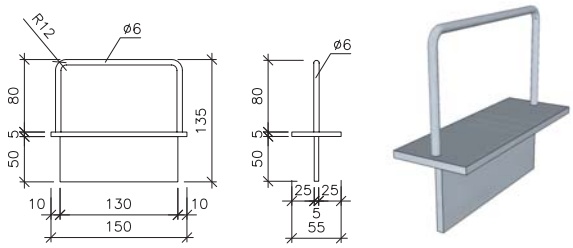

4. LAYING SLOT CHANNEL

4.1 Staking positional and height locations

A surveyor shall use the completed documentation to stake out the directional, height and catchment specifications for the underlying concrete. The axes of the slot channel are first laid out following the exact measurement of a polygon fully respecting the installation length of all channel components and covering the curve of the height and directional positioning of the installed channel.

The installation dimension is used when measuring the polygon and for basic slot channel this dimension is 4000 mm. The installation dimension for cleanout and inlet sections is 1000 mm. This dimension must also be respected if the channel is laid into a curved polygon following the curvature of the edge of the road whereby the installation dimension of the channel must be measured at the inner edge of the polygon formed by the channel segments.

The slot channel must be installed in the polygon given by the curved axis of the channel while ensuring that deflection along the longitudinal axis of two consecutive channel segments does not exceed 3°. Deflection of more than 3° affects the seal at individual joints. Atypical channel lengths must be used in order to achieve the required values for maximum deflection in the direction of smaller radius curves as this allows us to decrease the deviation from the axis. Special curved slot channel pieces are used to deal with stand-alone breaks in the routing of the slot channel.

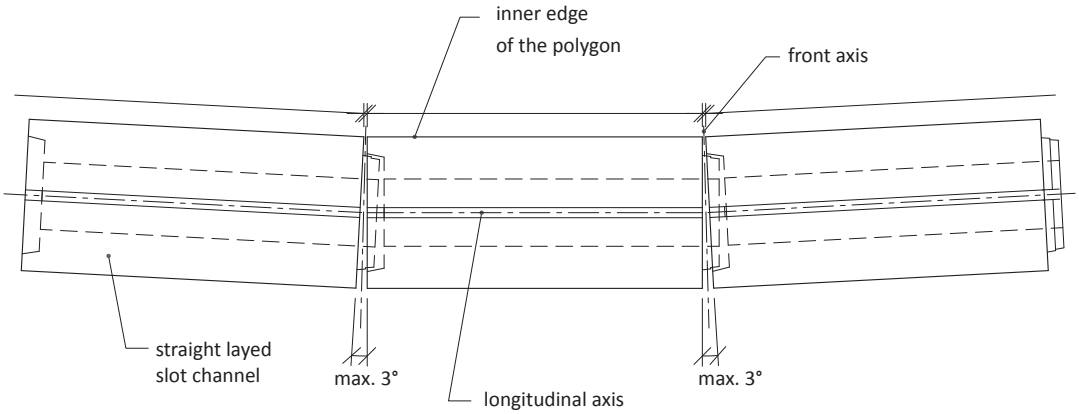

4.2 Laying the underlying concrete

A concrete base for installation of the slot channel must be installed on a sufficiently compacted footing. The foundation shall be completed using concrete in the quality defined in the project (at least C12/15 for D400 class loads; C30/37 for E600 and F900 class loads pursuant to CSN EN 206-1 and CSN 1433) with a damp to wet consistency. In the ideal case formwork would be used to create the foundation, in particular in places where the road itself tilts laterally. The concrete is manually shovelled into the formwork and then compacted using a mason's trowel. The surface is smoothed using a straight edge with the upper edges of the formwork beams used as a guide (see the illustration).

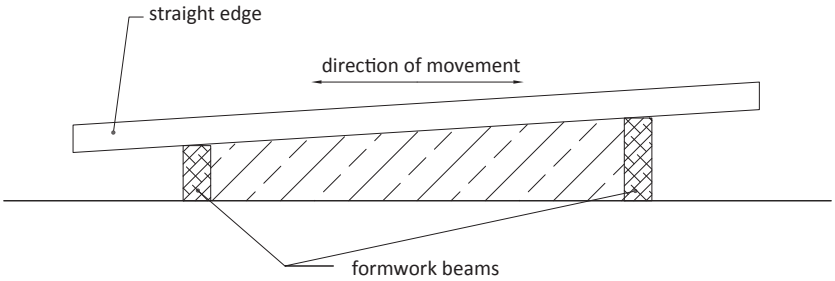

4.3 Installing shafts beneath inlet pieces

A slot channel configuration as shown in the illustration represents the usual installation of a shaft beneath an inlet piece according to the manufacturer.

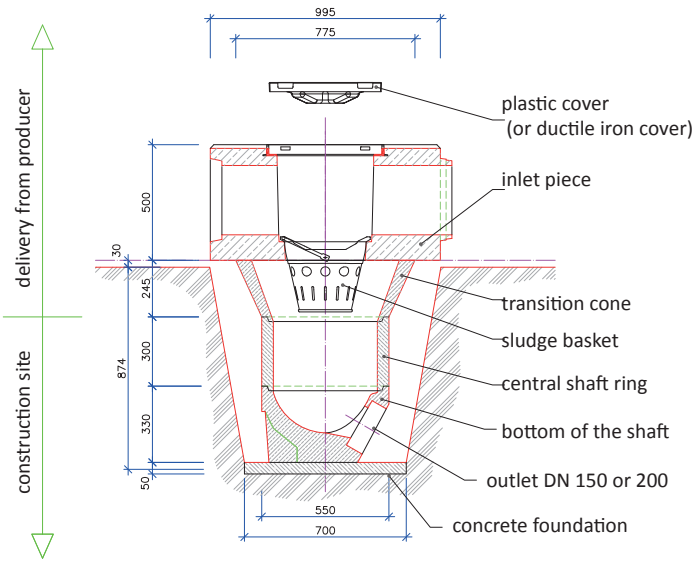

A minimal shaft can be created using these components in areas with a frost line depth of up to 80 cm, see the illustration.

Only the small sludge basket can be considered in such configurations.

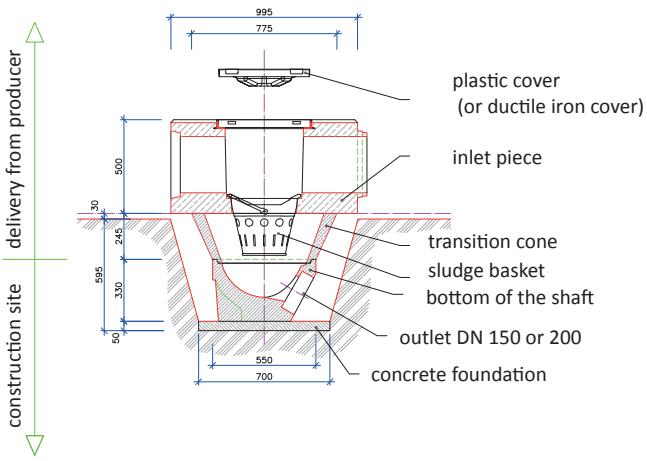

Once the inlet channel section has been properly staked out, excavation follows with a length of 1200 mm (in the direction of the axis of the channel) and a width of 1000 mm (perpendicular to the axis of the channel) while length must be selected so as to ensure access to the channel opening at the base of the inlet section for a sewer connection. The depth of this excavation for the basic inlet shaft is 875 mm + 50 mm, i.e. 925 mm beneath the upper surface layer of underlying concrete (625 mm for lowered shafts). The base of the excavated structure is then levelled and compacted and the sewer connection is uncovered.

C12/15 concrete screed with a slightly wet consistency is then laid at the base as an underlying layer. The bottom of the shaft is inserted into the excavation and connected to the sewer drain. A 1500 mm-long lath connecting the cross-sectional axes of the slot channels is laid through the stakes indicating the final position of the inlet piece. This defines the axis of the slot channel above the excavation. The middle of the inlet shaft is defined as half the distance between crossbars of the marking stakes. Plumb from the centre of this shaft is considered its bottom. The part is centred on the bottom of the shaft. Check to ensure a proper connection to the sewer. The part at the base of the shaft is concreted to a height of 250 mm including the connecting channel. The sewer connection is checked through the inside of the lower part of the shaft to ensure that no concrete had penetrated inside the channel. A central shaft ring is then installed on the base of the shaft into the mounting lock. The transition cone is the installed on the shaft ring. The shaft is then backfilled using a suitable material (e.g. gravel sand) and compacted in layers up to a maximum of 0.30 m thick to the level of compaction stipulated in the project. Backfilling continues to the level of the footing of underlying concrete for the slot channel. Only a portion of the transition cone to be concreted with underlying concrete is used at the footing level.

4.4 Preparing the bed for laying channel

The installation of the slot channel can begin after all previous steps are completed, including the underlying concrete as well as inlet shafts as described in the previous points herein. Once construction preparations have been completed only then can slot channel installation begin.

Any debris must be cleaned from the underlying concrete and an installation layer of primarily earthy moist concrete mixture in a quality defined by the project (min. C 12/15) is applied to the underlying concrete. The mixture must be produced using aggregates with granularity not to exceed 10 mm. A layer of flexible construction adhesive (max. 10 mm thick) can also be used with the approval of the Investor‘s technical supervisor. The concrete mixture is applied between the laths indicating the elevation grade line so that the layer extends around 100 mm in a transverse direction past the edge of the installed concrete slot channel. This procedure is shown in the following image:

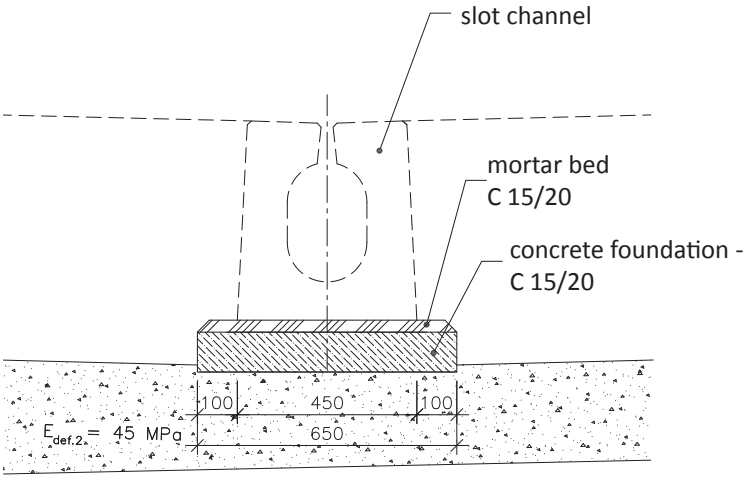

4.5 Slot channel installation

Before starting the actual installation of the slot channel it is best to create a backfilling plan to be based on the installation procedure and selected so that the individual channel sections terminate with sockets (determined with the help of the laying plan). This recommendation may not apply in all cases. For channel with an internal slope it is important to plan the process so that one end with the downward slope is installed into the socket and the other end is installed into the coupling ring.

A backfilling plan can significantly shorten the laying process. Two basic methods are used for transporting and storing slot channels:

- **Channel storage next to site of installation** - this method is the most commonly used. Slot channel sections loaded on a means of transport are unloaded using the boom arm on the means of transport itself or a mobile crane and placed around 1 m from the future installation site in parallel to the longitudinal axis of the direction of the channel line. The locations where such channel is unloaded must be clean and free of stones or other items that could cause indentations or other damage to the slot channel. Channels are connected in sections ready for installation before the completion of the bed layers.
- **Continuous installation** - the slot channel are unloaded from the means of transport using the boom arm on the means of transport itself or a mobile crane and placed directly into the site of installation as an integral part of the installation process. A jig must be used during continuous installation to secure all movements with hydraulic controls in order to ensure sufficient flow and sensitivity when laying channel at the installation site.

The selection of the type of transport used for concrete channels should always be based on local conditions and should correspond to the resources available at the site.

The actual installation of the slot channel is conditioned by completion of all work, activities and structures shown in the previous sections of these instructions.

Slot channel is suspended on the hoisting equipment using special installation equipment (see charter 3.3).

Ensure that the installation equipment is positioned along the longitudinal axis of the slot channel so that the suspended channel is approximately in a level position. Once lifted and positioned to a height of 1.0-1.2 m above the laying site the final integrity check of the face surfaces on the channel is complete. On the interior surfaces of the socket an installation adhesive is applied (sliding material) to a thickness of around 0.5 mm. On the first coupling ring on the other face a rubber gasket is installed so that the angled portion is directed inside the channel and the flat section is up against the other coupling ring. Installation adhesive is also applied to the rubber gasket. The procedure is shown in the following image:

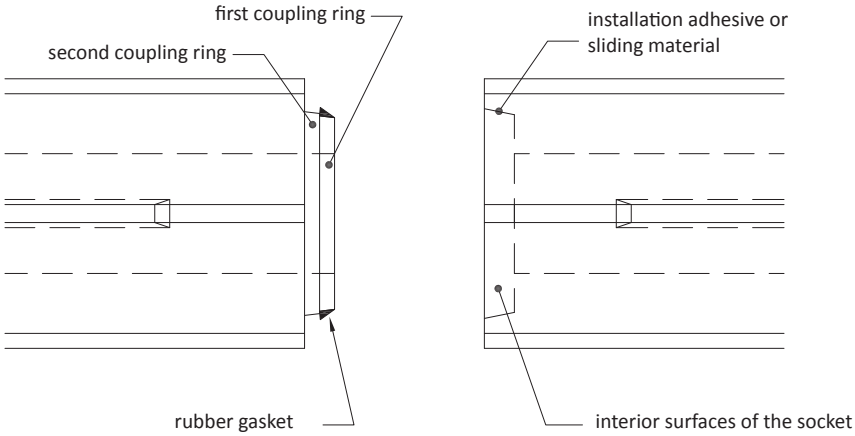

The channel is slowly lowered into the bed once these joint preparations are complete. A metal strip 200 mm wide and 550 mm long is installed at the channel joint between the end of the channel and the bed. This strip ensures the channel itself slides easily and prevents concrete from the installation layer from penetrating into the area of contact between the slot channel sections. The metal strip at the point of contact between two slot channel sections is left in place or is removed once the sections are connected and is reused at other joints. At least two workers are required for installing channel in the bed. Each of these workers conducts the activities at the ends of the channel sections as defined herein during the actual laying of the channel.

The first component of a slot channel is installed in such a manner that the precast component is placed on the bed so that its exact position matches the staking points just before it is pushed into the bed. The hoisting equipment is disconnected from the component for use with the next section of channel only after installation is complete. If installation will not continue in one direction (i.e. at the end of the channel), the end face in this direction is covered with a end cap that is produced and delivered by the manufacturer. Once again a rubber gasket and installation adhesive are used to install a blank and are applied in the same manner as the gasket and adhesive on the socket of a concrete component.

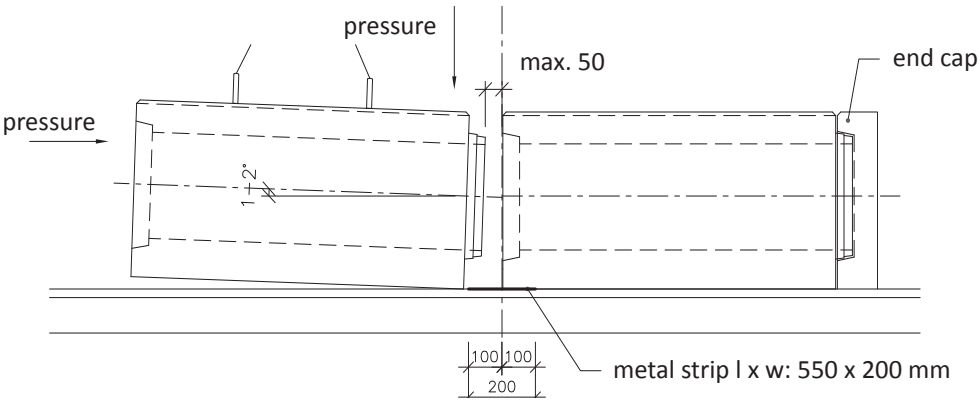

The installation of additional slot channel sections proceeds as follows: once the component has been inspected and the channel joints are prepared, the channel section is hoisted using hoist equipment and moved over the bed into its final position and is levelled into its final installation point as the component is slowly lowered into place. Once all of the connecting rings on the installed channel reach the level of the socket of the previously installed element, the end of the suspended channel is pushed gently downwards. The other end is lifted gently. This leads to a slight longitudinal slope in the channel as shown in the illustration.

In this position the channel is positioned so that the coupling ring and socket of the connected channel are facing one another, both in terms of height and direction. This must be achieved when the connected channel sections are a maximum of 50 mm from each other. If the distance was larger the face of the suspended component would rest on the concrete mixture and not the flexible adhesive. The channel is then pushed into the socket of the previously installed component until the suspended channel and this concrete component reach the desired position. Any concrete that penetrates and fills the contact surfaces of the joint results in a defective joint and such contact surfaces must be removed.

An expansion joint between the faces of the installed channel from 5 mm to a maximum of 15 mm must be maintained when installing the channels into one another! This also applies to channel sections installed at angles and for more narrow sections of joints (for wider sections of joints the maximum deflection in face surfaces of 3° applies, see Chapter 4.1. or a joint width of up to 25 mm). The expansion joint spacer mentioned in chapter 3.3 can be used in order to ensure the minimum expansion joint requirements are met. Production tolerances may cause differences in the height of channel sections at points of contact as shown in the following illustration:

Relative positions of component face surfaces

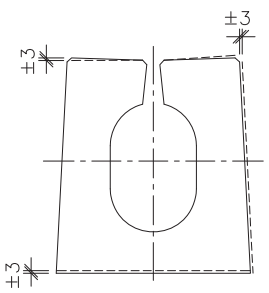

Side view of the joint

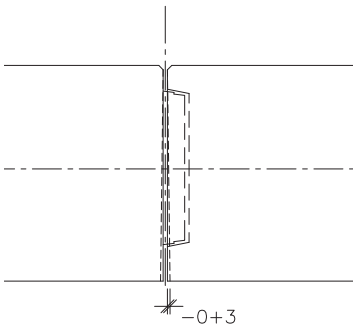

Top view of the joint

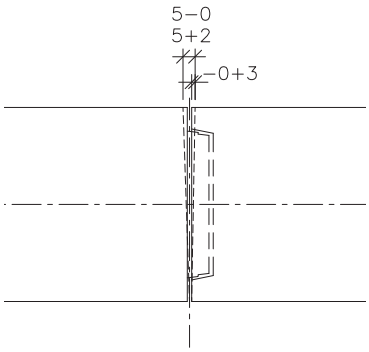

Once the component has been definitively installed, the installation equipment is released and the process is repeated. Blanks are once again installed as needed using the previously described manner.

The channel can never be installed where the faces are in contact with each other. This could cause a serious failure in the system over time given the thermal expansion of the individual components!

4.6 Manufacturing tolerances for adjacent elements

During channel installation ensure that the channels are installed at approximately the same height and with the same cross slope at the locations of their individual joints. If a component rotates in an undesirable manner around the longitudinal axis, this causes irregularities in the contact faces and protruding sections causing excessive loading and thereby significantly increasing the potential for failure on the surfaces of the edges of these components.

Irregularities may also occur during installation as a result of the dimensional tolerances of the individual components as shown in charter 3.2. Such deviations in the installation of adjacent channel sections are not a functional or static defect.

5. EXPANSION JOINTS FOR SLOT CHANNELS

Proper expansion joints are essential for ensuring trouble-free functionality of slot channels. Thermal expansion in concrete and other structures as well as the channel itself in the absence of expansion joints could lead to a serious failure of the precast components.

Failures are manifested in cracks, in particular on the surface of slot channel components as is shown in the illustrations below.

EXPANSION JOINTS MUST BE COMPLETED AT THE POINT OF CONTACT OF THE FACES OF THE SLOT CHANNEL AND IN A LONGITUDINAL DIRECTION AT THE POINT OF CONTACT WITH OTHER STRUCTURES OF THE PAVED SURFACE.

5.1 Longitudinal expansion joint

An expansion joint spacer along the entire height of the precast component is glued to the side of the Slot Channel using construction adhesive just before the Slot Channel section itself is installed. The thickness of such spacer must be based on the project itself and must be clearly defined in the technical documentation. The spacer must be made from an elastic, compressible and volume stable material (e.g. hardboard dipped in asphalt, EPS70 etc.), which must also be protected against physical damage when compacting adjacent non-compacted layers. The spacers must be installed very close to one another without any open gaps. The individual spacers should also be secured with tape to prevent cement milk or other debris from penetrating into these joints during the completion of the structural layers of the paved surface which would eliminate the effectiveness of the thermal expansion joint. Spacers that are installed adjacent to layers that require compaction should be protected against deformation by installing a strip of metal with a minimum thickness of 0.7 mm with an overlap of approximately 20 mm above the compacted layer. This strip of metal ensures the diffusion of local loads and prevents the destruction of the spacer caused by pressure applied to the side during compaction of the structural layers. Such spacers for thermal expansion minimize the potential for damages caused by changes in volume as a result of ambient temperatures on the solid surfaces of the slot channel.

Hardboard - soft board made from wood fibre

Expansion joints along the side of the slot channel must always be installed when the structure of the adjacent road includes layers composed of a bound material (including layers of underlayment or porous concrete, a cement stabilization layer, KSC, etc.).

A common standard is to apply a concrete stabilizer beneath the wearing layer that is heated by the black asphalt, which applies a large lateral force on the slot channel as a result of the thermal expansion of the concrete. This would lead to a serious failure of the system and the appearance of cracks on the surface of the slot channel.

The only case where no spacer is needed on the side of a slot channel is in locations where the channel itself is adjacent to landscaping and soil has been used as the backfill material and in cases where the adjacent road surface does not include compacted materials anywhere in the structure of the road (e.g. asphalt layers with gravel base layers, etc.). In such cases the slot channel sections should be treated with a single-layer coating (e.g. N 1V; EKM pursuant to CSN 73 6129). The correct application of spacers is shown in the following illustration.

Expansion joints are cut along the slot channel to a depth of 50 mm after the completion of the final layers of the paved surface structure. These joints are then cleaned using a brush or compressed air to remove all debris. Then a sealing filament of a corresponding width (e.g. polyethylene foam) is installed into this cut, onto which a grout material is poured to a depth of 25 mm. The final form of the example cross section of a slot channel is shown in the following illustration:

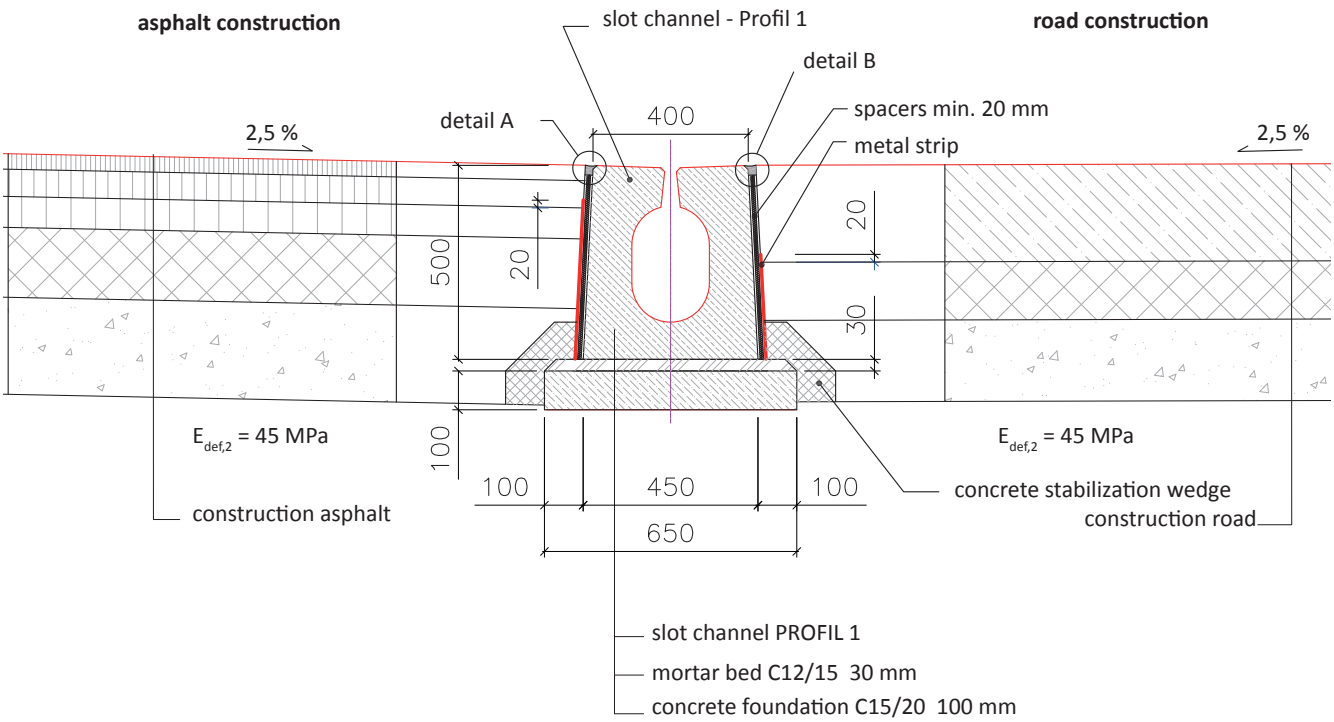

Note: For the Dilata on, compacting but volume resistant material is used (e.g., Bitumen Hobra, EPS 70, and the like). As protection against mechanical damage, a mudguard with min. 0.7 mm thickness and supernatant of min. 20 mm placed over the compacted layer.

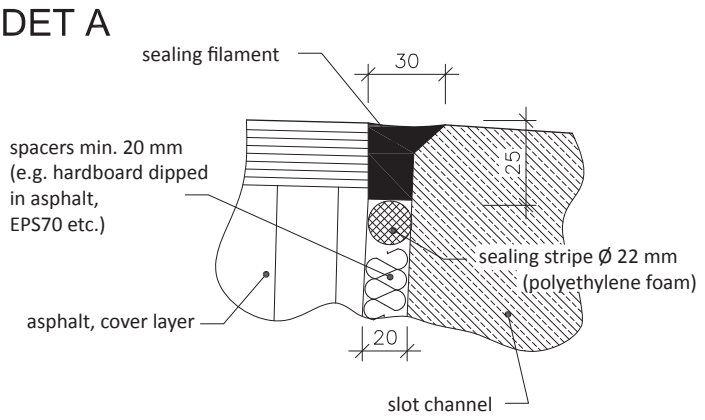

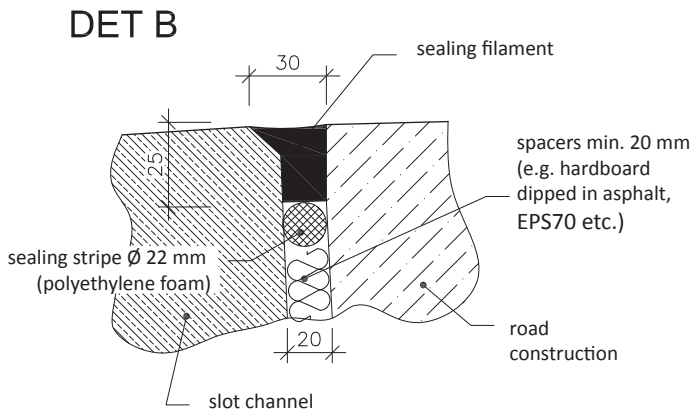

Practical experience has shown that the functionality of otherwise correctly installed expansion joints is destroyed during the completion of upper structural layers of paved surfaces and that such occurrence is more and more common. This failure is indicated by characteristic small cracks that begin to appear in the surface of the slot channel in a short period of time during hot summer months when temperature differences occur between the paved surface and the channel.

In such case an additional cut for longitudinal expansion joints should be made using a concrete saw to a depth of at least 400 mm. The cut must be completed at a slight angle to match the slot channel. Cutting the joint should be relatively simple (quick) as a large portion of the area being cut should be the soft expansion joint material (hardboard or polystyrene). Where the expansion joint has been compressed or has failed, the correct expansion joint must be cut and restored. The worker making such cut must avoid cutting into the edge of the slot channel so as to prevent any aesthetic damage to the precast component. Cuts must be completed along the entire length of the installed slot channel and from both sides.

The longitudinal expansion joint is then cleaned (e.g. using compressed air) once the cutting work is completed. The expansion joint space is left empty. If the cut is likely to be filled in during the compaction of non-compacted lower layers, the cut is filled in using crushed polystyrene or crushed rubber. Grout is then applied to the top of the cut. Before the grout is applied a sealing filament of a corresponding width (e.g. polyethylene foam) is installed into the cut to create space for the grout to be installed to a depth of 25 mm. The final form of the example cross section of a slot channel is as follows:

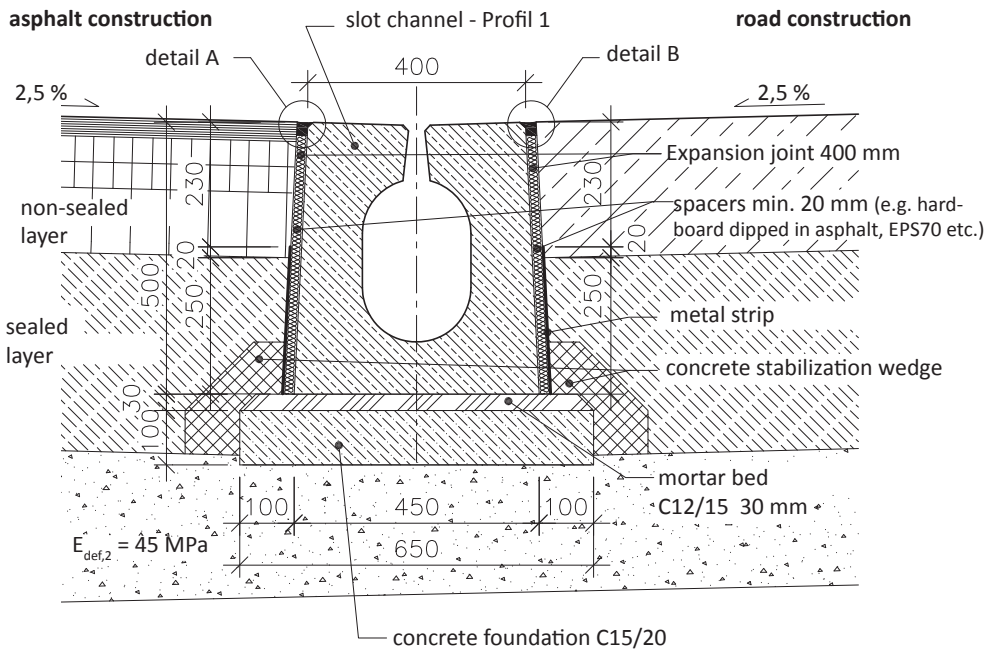

DET A

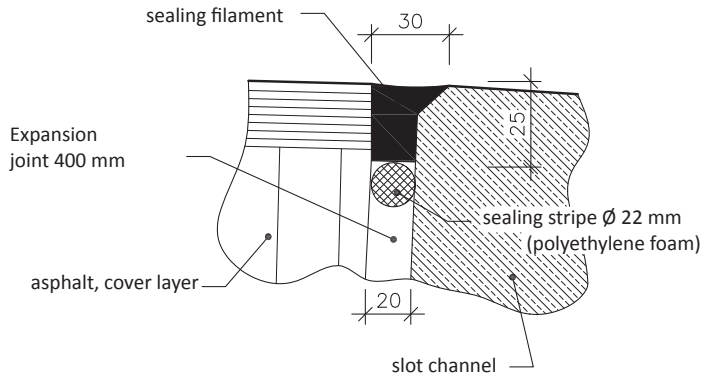

DET B

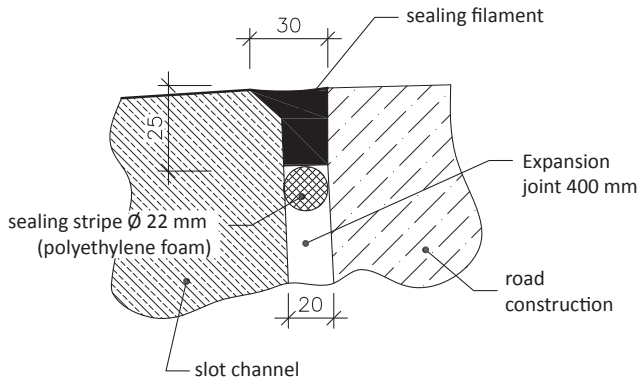

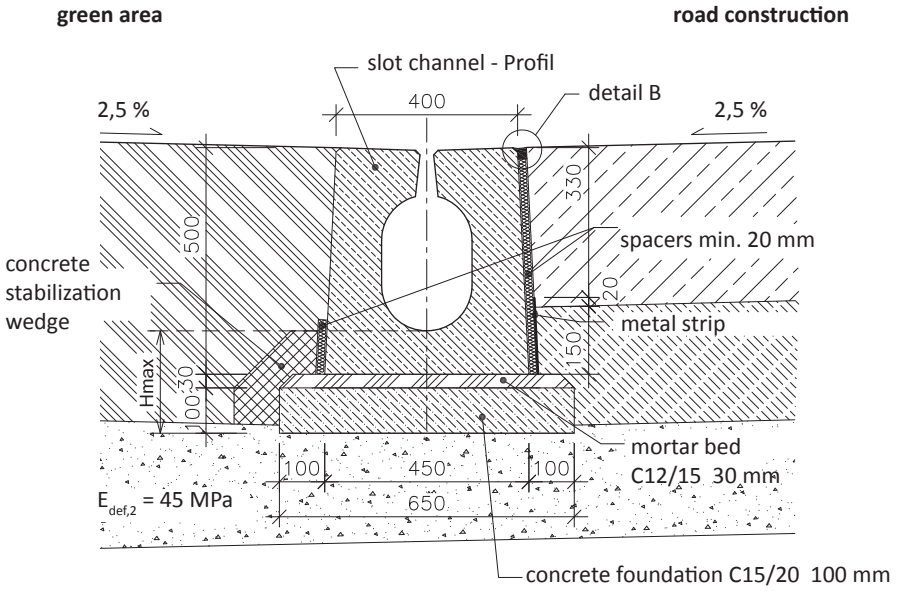

If one side of the slot channel will only be adjacent to soil and landscaping then longitudinal expansion joints are not required in most cases. From this side only a concrete stabilization wedge is needed to limit any eventual horizontal shift in the channel caused by compaction of the structural layers of the paved surface on the other side of the channel. The height of such wedge should not exceed the level of the flow profile of the slot channel (see the illustration).

All fill material must also be prevented from falling into the contact surfaces of the slot channel joints. In the ideal case cardboard (IPA) would be adhered to the contact joint.

5.2 Expansion joints at points of contact

The joints between the faces of the individual slot channel components must be sealed with adhesive. Adhesives applied to the joints prevents water from penetrating into the lower layers of the roadway structure and their subsequent destruction, in particular during winter months. The joint must be cleaned with a brush or compressed air and throughly degreased before starting work. The joint must also be completely dry.

Materials used:

- Sealing gasket, round, 8 or 10 mm in diameter, made from polyethylene foam
- Adhesive (e.g. MASTERsil 40 Sha polyurethane adhesive)

Tools:

- Spatula
- Broom
- Application gun

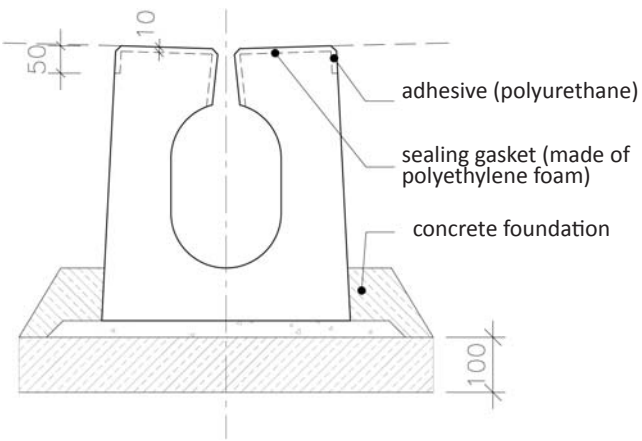

The contact surfaces of the faces of the slot channel must be dry, degreased and clean. The sealing gasket is applied between the faces and pressed from the upper surface in a downward direction to a depth of around 50 mm. The entire depth of such a prepared joint is filled with adhesive (e.g. MASTERsil 40 Sha polyurethane adhesive - produced by Donauchem s.r.o.) and is smoothed with the spatula. The joint must be protected from the effects of any precipitation for at least 4 hours. If the longitudinal joint is sealed with an asphalt-modified grout during the laying of the wear layer, such grout material should be used to fill the contact joint rather than MASTERsil.

6. FINAL INSPECTION OF SLOT CHANNEL DRAINAGE

The final activities before turning over the slot channel drainage for use are the installation of the basket on the inlet and securing the plastic cover or alloy mesh to the inlet and cleanout components. A visual inspection of the upper surface of the slot channel is conducted and any minor defects caused during installation are repaired. Properly installed slot channel sections are precisely aligned along their top surface and their height; joints in straight sections are identical to within around 5 mm and to within 5 mm in curved sections joints at the narrowest point without any significant differences between the individual joints. Correct assembly of the components into a polygon matching the curve of the installed channel is evidence of this.

7. HANDLING COMPONENTS DURING INSTALLATION

The company installing the slot channel must be aware that the channel is produced from aerated C45/55 concrete for XF4 environments pursuant to CSN EN 206-1. This means that repairs of components conducted in the field after installation are extremely complicated and can only be completed using a special material and following the procedure defined in the manufacturer‘s directive. It is exceptionally important to avoid hitting the edges of the components with metal items and to avoid hitting the components into one another during installation and transport. Concrete in this class is very strong but very fragile as well. It acts more like a ceramic or glass material. This means that workers handling and installing the slot channel components must receive special training.

Avoiding all contact between the slot channel components and heavy construction equipment is also critical. Vibration cylinders, finishers and pressure applied by crane stabilizers are among the most frequent sources of damage that results in the failure of these channels. Such damage to slot channels is so serious that in most cases the entire precast component must be replaced.

Thank you for the attention you have given this instruction and we also request that all responsible individuals ensure that the proper procedure for laying and installing slot channels be followed so as to avoid all of the inconveniences caused by using incorrect procedures.

After all you are simply protecting yourself most of all!

REMEDYING THE CONSEQUENCES OF USING THE INCORRECT PROCEDURES IS OFTEN TIMES PROBLEMATIC FROM A TECHNICAL PERSPECTIVE BUT ALSO VERY COST AND TIME INTENSIVE AS WELL!

Thank you for your understanding!